REV. LTR.	DESCRIPTION	APPROVAL	DATE
A2	Update drawing	W.Q.LI	2024.06.06

RoHS compliant

Lead-free

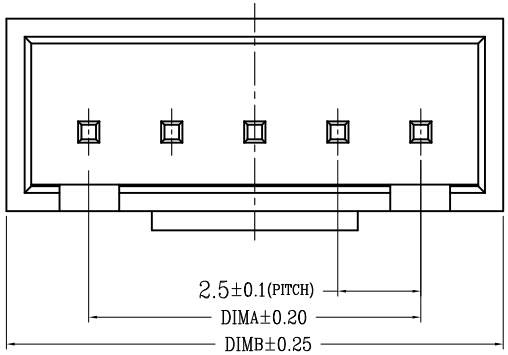

Specifications:

1. Voltage rating:250V AC/DC.
2. Current rating:3.0A AC/DC.
3. Withstanding voltage:800V AC/minute.
4. Ambient temperature range:-40～+85℃.
5. Insulation resistance:≧1000MΩ.
6. Contact resistance:≦20mΩ.
7. Applicable wire Sizes:AWG#22～#28.
8. Housing①:PA66 UL94-0 White.
9. Upper terminal②:Brass/Tin Plating.

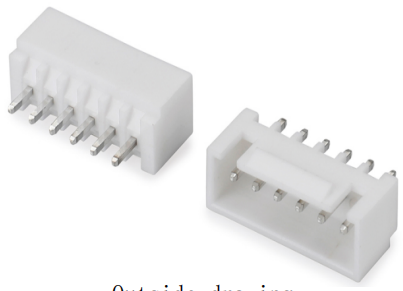

Outside drawing

Product material No:

EN250KLC-**-* * *-*

- NO OF Poles
- Terminal Plating
  - B=Bright-Tin
  - M=Mist-Tin
  - G=Gold flash
- Plastic Material
  - P=PA66
  - T=PA9T
  - L=LCP
- Packing
  - T=Tube
  - B=Bag
  - R=Tape&Reel
- Plastic Color
  - Y=Faint Yellow
  - R=Red
  - B=Black
  - W=White

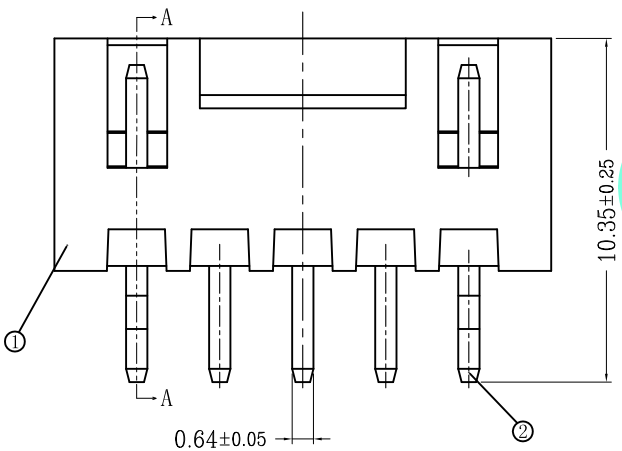

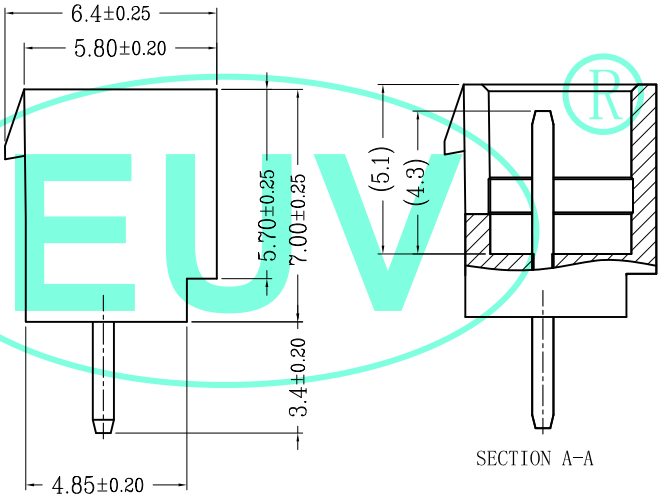

SECTION A-A

Pin number:

CKT	DIM A	DIM B	CKT	DIM A	DIM B
2P	2.50	7.50	12P	27.50	32.50
3P	5.00	10.00	13P	30.00	35.00
4P	7.50	12.50	14P	32.50	37.50
5P	10.00	15.00	15P	35.50	40.00
6P	12.50	17.50	16P	37.50	42.50
7P	15.00	20.00			
8P	17.50	22.50			
9P	20.00	25.00			
10P	22.50	27.50			
11P	25.00	30.00			

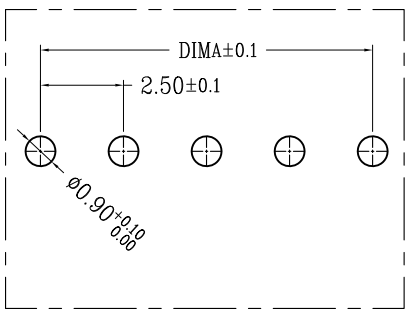

Recommended P.C.B Layout

General Tolerance±0.05

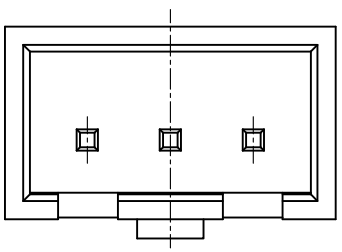

2～4P

http://www.euvchn.com		EUV ELECTRONICS CO.,LTD 兆進電子有限公司			
30～Above ±0.30	ANGLE:∠±1°				
10～30 ±0.20	SCALE:1:1	TITLE	2.50mm Connectors (180° DIP)		
5～10 ±0.15	SHEET:1 OF 1	PART NO.	EN25KLC-**-***-*		
0～5 ±0.10	PROJECT	APPROVAL	CHECK	DRAWN	DATE
TOLERANCESARE (UNIT:mm)	SIZE:A4	W.Q.LI	X.H.LIN	K.J.ZENG	2024.06.06