REV. LTR.	DESCRIPTION	APPROVAL	DATE
A2	Update drawing	W.Q.LI	2024.06.06

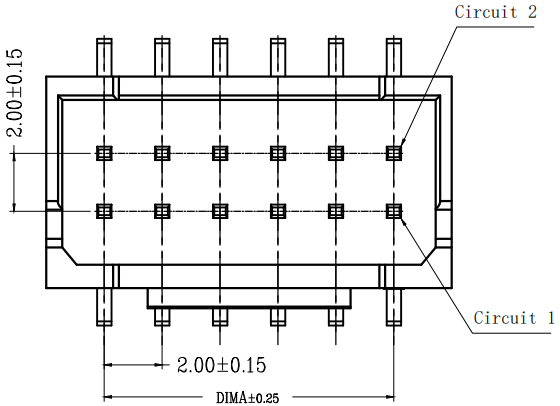

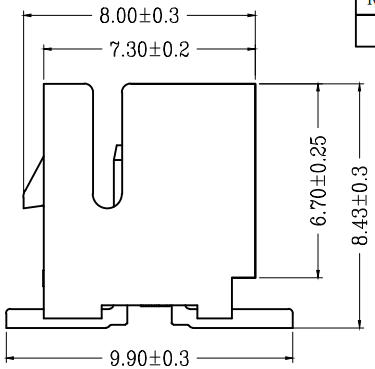

Specifications:

1. Voltage rating:250V AC/DC.
2. Current rating:3.0A AC/DC.
3. Withstanding voltage:800V AC/minute.
4. Ambient temperature range:-40～+85℃.
5. Insulation resistance:≧1000MΩ.
6. Contact resistance:≦20mΩ.
7. Applicable wire Sizes:AWG#22～#28.
8. Housing①:LCP UL94-0 Natural.
9. Upper terminal②:Brass/Tin Plating.
10. Cover③:LCP UL94V-0 Natural.

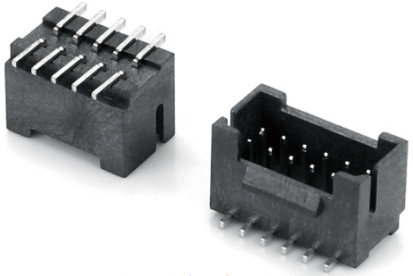

Outside drawing

Product material No:
EN200KSLT-**-* * *-*

- NO OF Poles
- Terminal Plating
  - B=Bright-Tin
  - M=Mist-Tin
  - G=Gold flash
- Plastic Material
  - P=PA6T
  - T=PA9T
  - L=LCP
- Packing
  - T=Tube
  - B=Bag
  - R=Tape&Reel
- Plastic Color
  - Y=Faint Yellow
  - R=Red
  - B=Black
  - W=White

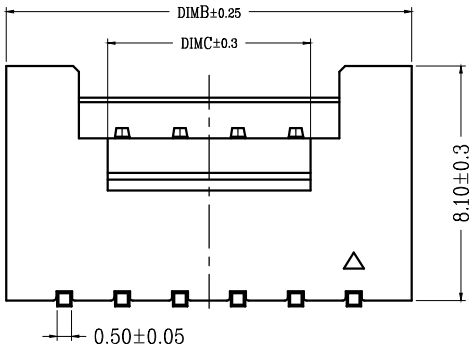

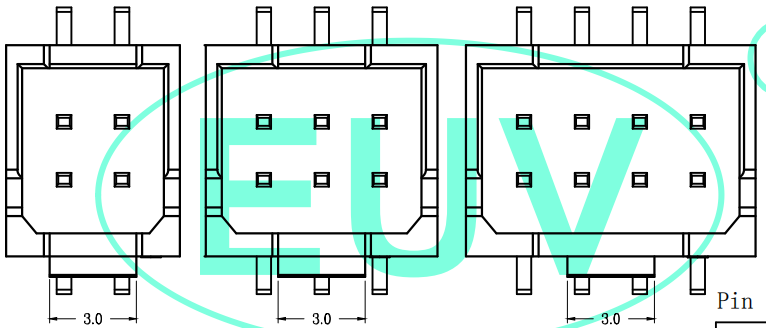

2～3P结构样式　　4P 结构样式

Pin number:

Poles	DIM A	DIM B	DIM C	Poles	DIM A	DIM B	DIM C
2X2P	2.00	6.00	3.00	2X12P	22.00	26.00	19.00
2X3P	4.00	8.00	3.00	2X13P	24.00	28.00	21.00
2X4P	6.00	10.00	3.00	2X14P	26.00	30.00	23.00
2X5P	8.00	12.00	5.00	2X15P	28.00	32.00	25.00
2X6P	10.00	14.00	7.00	2X16P	30.00	34.00	27.00
2X7P	12.00	16.00	9.00	2X18P	34.00	38.00	31.00
2X8P	14.00	18.00	11.00	2X20P	38.00	42.00	35.00
2X9P	16.00	20.00	13.00	2X22P	42.00	46.00	39.00
2X10P	18.00	22.00	15.00				
2X11P	20.00	24.00	17.00				

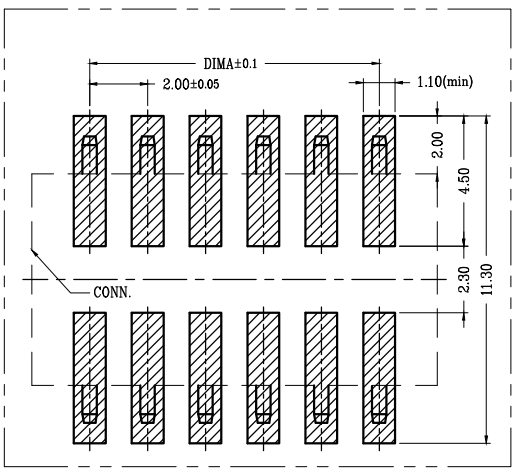

Recommended P.C.B Layout
General Tolerance±0.05

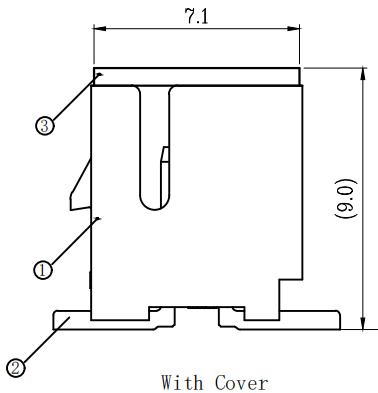

With Cover

2*2PIN-2*5PIN	0.10
2*6PIN-2*12PIN	0.13
2*13PIN-2*22PIN	0.15

RoHS compliant　Pb Lead-free

http://www.euvchn.com		EUV ELECTRONICS CO.,LTD 兆進電子有限公司				
30～Above ±0.30	ANGLE:∠±1°					
10～30 ±0.20	SCALE:1:1	TITLE	2.00mm Connectors (180° SMT)			
5～10 ±0.15	SHEET:1 OF 1	PART NO.	EN200KSLT-**-***-*			
0～5 ±0.10	PROJECT	APPROVAL	CHECK	DRAWN	DATE	
TOLERANCESARE (UNIT:mm)	SIZE:A4	W.Q.LI	X.H.LIN	K.J.ZENG	2024.06.06	