REV. LTR.	DESCRIPTION	APPROVAL	DATE
A2	Update drawing	W.Q.LI	2024.06.06

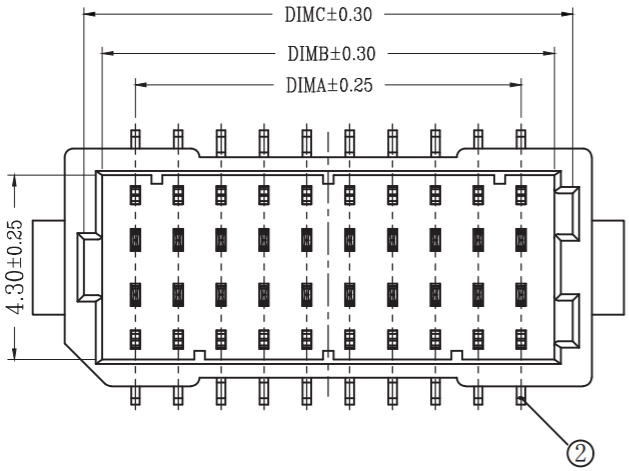

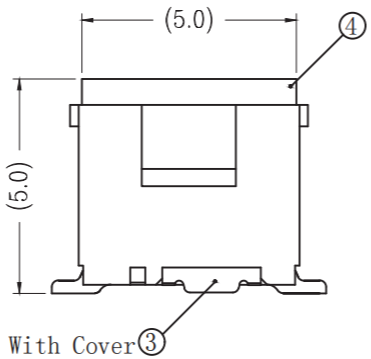

Specifications:
1. Voltage rating:50V AC/DC.
2. Current rating:1.0A AC/DC.
3. Withstanding voltage:500V AC/minute.
4. Ambient temperature range:-25～+85℃.
5. Insulation resistance:≧100MΩ.
6. Contact resistance:≦20mΩ.
7. Applicable wire Sizes:AWG#28～#32.
8. Housing①:LCP UL94V-0 Natural.
9. Upper terminal②:Phosphor copper.
10. Fitting Nail③:Phosphor copper.
11. Cover④:LCP UL94V-0 Black.

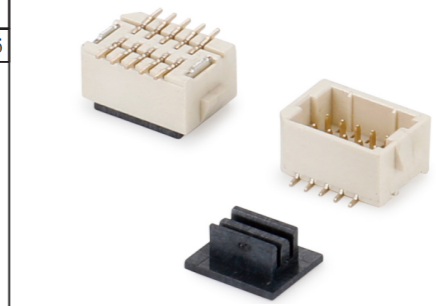

Outside drawing

Product material No:
EN100DSLT-**-* * *-*

NO OF Poles
Terminal Plating
B=Bright-Tin
M=Matt-Tin
G=Gold flash
Plastic Material
P=PA6T
T=PA9T
L=LCP
Packing
T=Tube
B=Bag
R=Tape&Reel
Plastic Color
Y=Faint Yellow
R=Red
B=Black
W=White

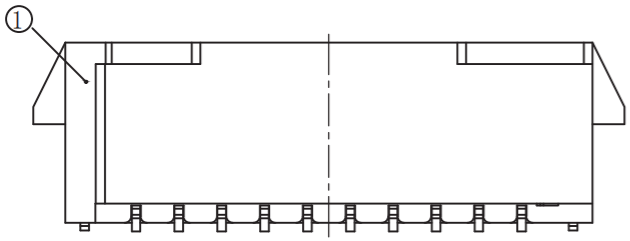

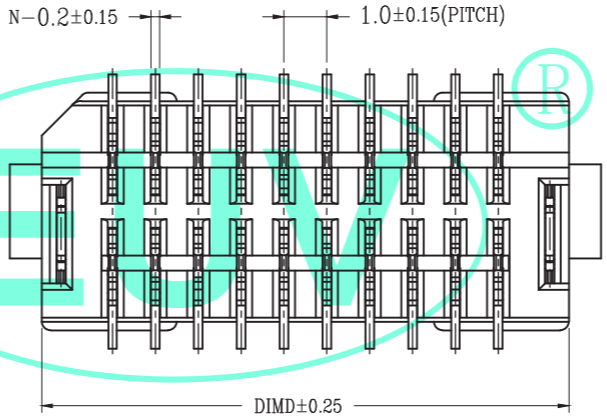

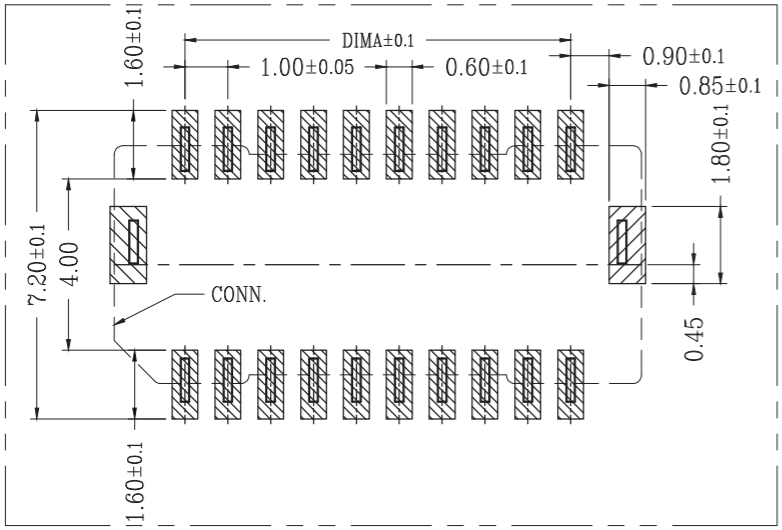

Recommended P.C.B Layout
General Tolerance±0.05

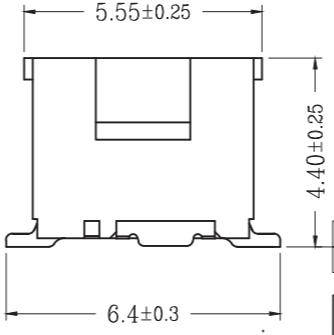

0.10	2*4P~2*15P
0.12	2*21P~2*25P

Pin number:

Poles	DIM A	DIM B	DIM C	DIM D
2X4P	3.00	4.55	5.40	6.30
2X5P	4.00	5.55	6.40	7.30
2X6P	5.00	6.55	7.40	8.30
2X7P	6.00	7.55	8.40	9.30
2X8P	7.00	8.55	9.40	10.30
2X9P	8.00	9.55	10.40	11.30
2X10P	9.00	10.55	11.40	12.30
2X11P	10.00	11.55	12.40	13.30
2X12P	11.00	12.55	13.40	14.30
2X14P	13.00	14.55	15.40	16.30
2X15P	14.00	15.55	16.40	17.30
2X20P	19.00	20.55	21.40	22.30
2X25P	24.00	25.55	26.40	27.30

RoHS compliant
Pb Lead-free

http://www.euvchn.com		EUV ®EUV ELECTRONICS CO.,LTD 兆進電子有限公司			
30~Above ±0.30	ANGLE: ∠±1°				
10~30 ±0.20	SCALE:1:1	TITLE	1.00mm Connectors (180° SMT)		
5~10 ±0.15	SHEET:1 OF 1	PART NO.	EN100DSLT-**-***-*		
0~5 ±0.10	PROJECT	APPROVAL	CHECK	DRAWN	DATE
TOLERANCESARE (UNIT:mm)	SIZE:A4	W.Q.LI	X.H.LIN	K.J.ZENG	2024.06.06